CSE 4303
Data Structures

Topic: Elementary Graph Algorithms

(Reference: Ch 22.1-22.3 CLRS)

Sabbir Ahmed
Assistant Prof | CSE | IUT
sabbirahmed@iut-dhaka.edu

Breadth-first search (BFS)

- BFS is one of the simplest algorithms for graph searching and the archetype for many important graph algorithms.

- Prim's minimum-spanning tree algorithm and Dijkstra's single-source shortest-paths algorithm use ideas similar to those in breadth-first search.

Breadth-first search

- Given $G = (V, E)$ and $source$ vertex s, BFS explores the edges of G to "discover" every vertex reachable from s.

Breadth-first search

- Given $G = (V, E)$ and $source$ vertex s, BFS explores the edges of G to "discover" every vertex reachable from s.

- Computes distance (smallest # of edges) from s to each reachable vertex.

Breadth-first search

- Given $G = (V, E)$ and $source$ vertex s, BFS explores the edges of G to "discover" every vertex reachable from s.

- Computes distance (smallest # of edges) from s to each reachable vertex.

- Produces "breadth-first tree" with root s having all reachable vertices.

- Discovers all vertices at distance $\boldsymbol{k}$ from s before discovering any vertex at distance $\boldsymbol{k+1}$.

- Discovers all vertices at distance $\boldsymbol{k}$ from s before discovering any vertex at distance $\boldsymbol{k+1}$.

- To keep track of progress, BFS colors each vertex $white$, $gray$, or $black$.

  - All vertices start $white$.
  - Later become $gray$.
  - Ends $black$.

- Our implementation stores G using adjacency lists.

- Our implementation stores G using adjacency lists.

- Each vertex u has three attributes:
  - $u.color$: white/gray/black
  - $u.d$: distance from source s to u
  - $u.\pi$: predecessor of u

- Our implementation stores G using adjacency lists.

- Each vertex u has three attributes:
  - $u.color$: white/gray/black
  - $u.d$: distance from source s to u
  - $u.\pi$: predecessor of u

- BFS uses a FIFO queue Q to manage the $gray$ nodes.

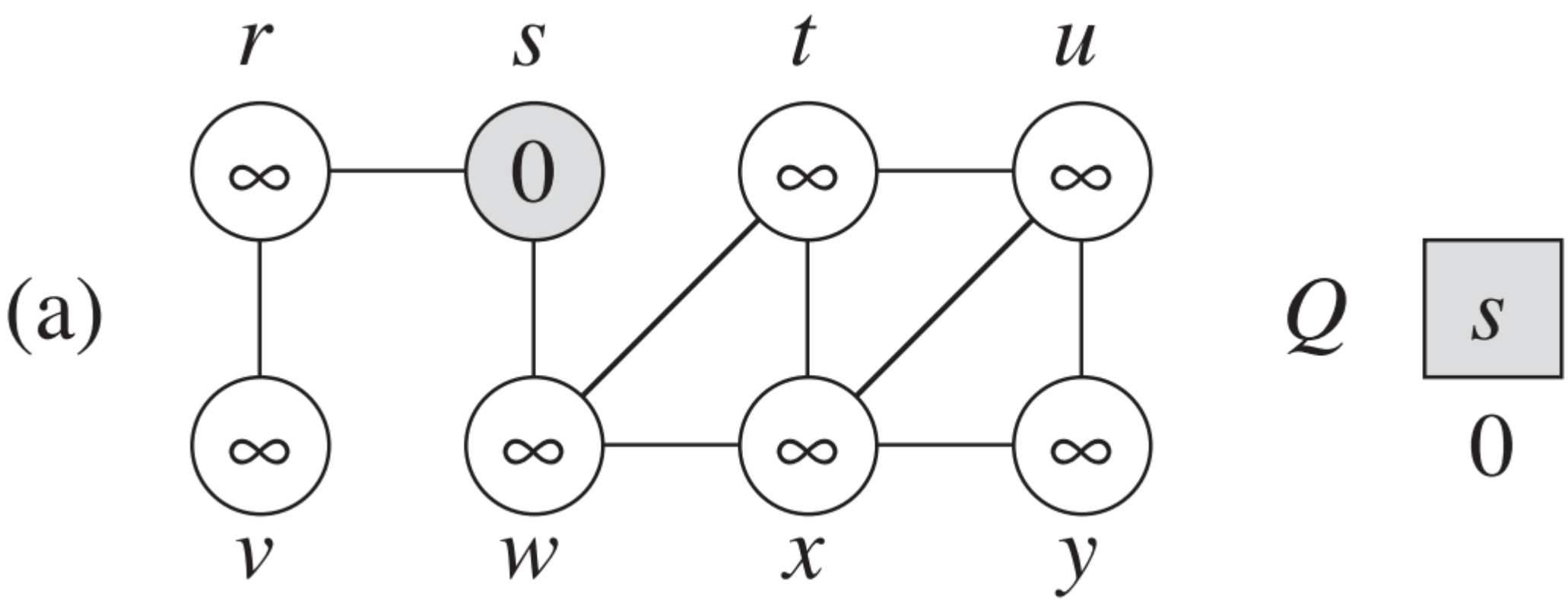
(a)
r
s
t
u
∞
0
∞
∞
∞
∞
∞
∞
v
w
x
y
Q
s
0

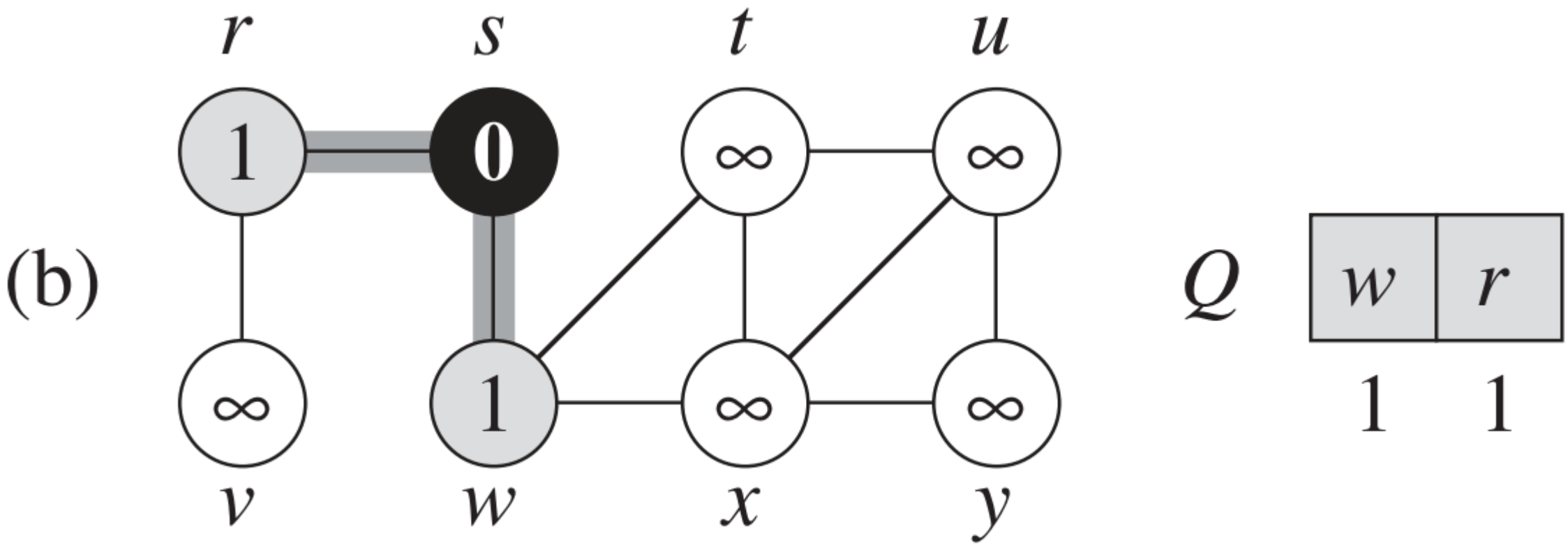
(b)
r
s
t
u
1
0
∞
∞
∞
1
∞
∞
v
w
x
y
Q
w
r
1
1

(c)

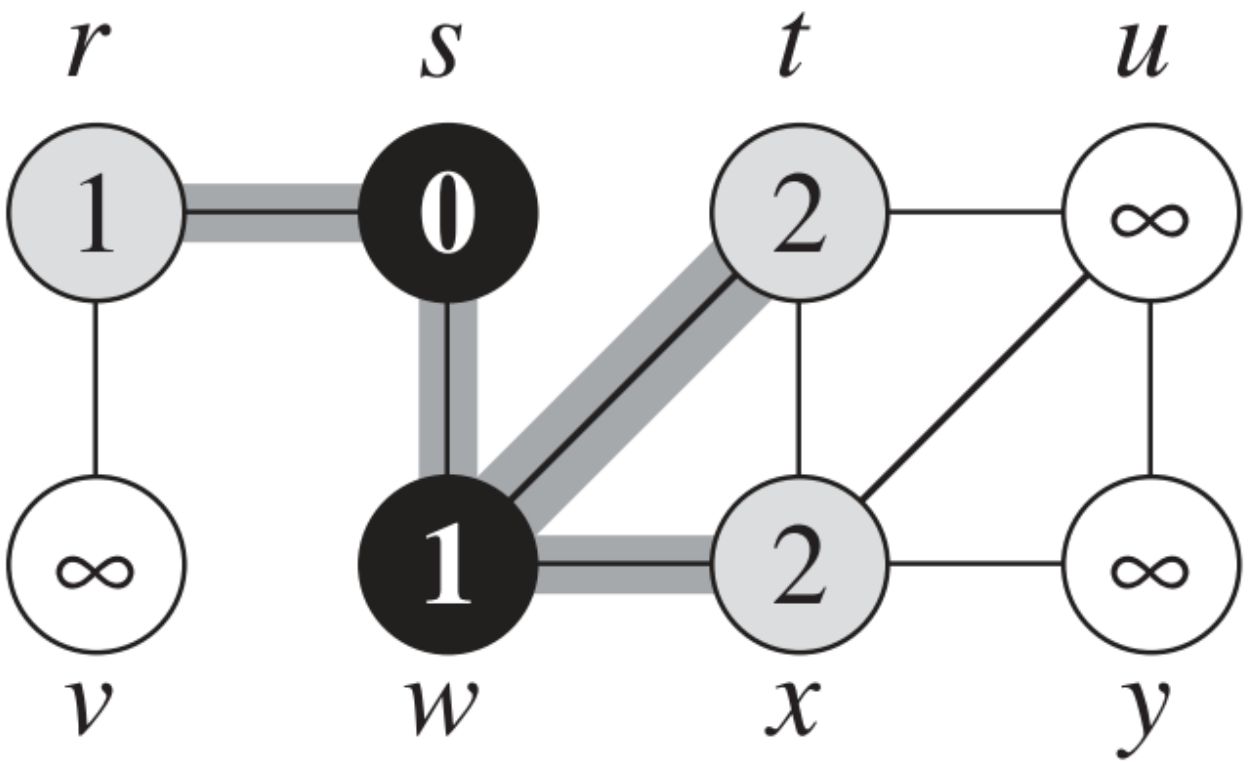

Q

r	t	x
1	2	2

(d)

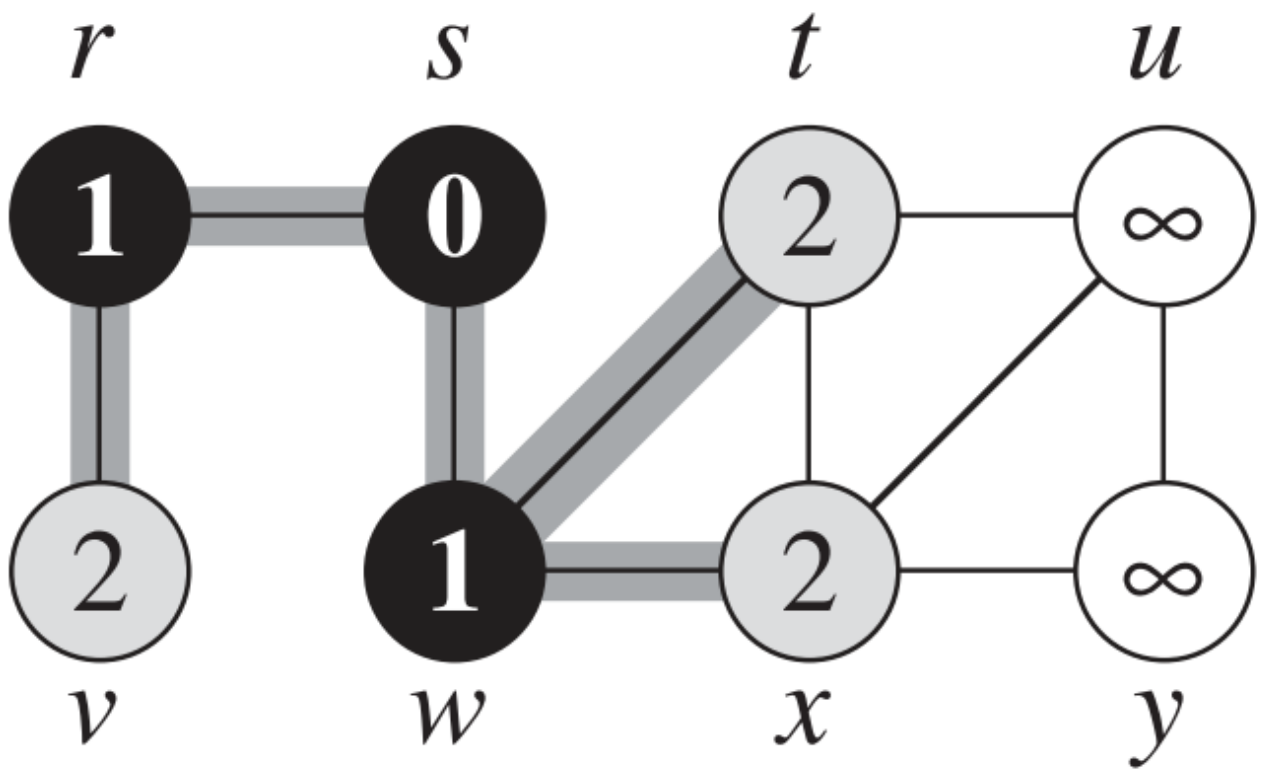

Q

t	x	v
2	2	2

(e)

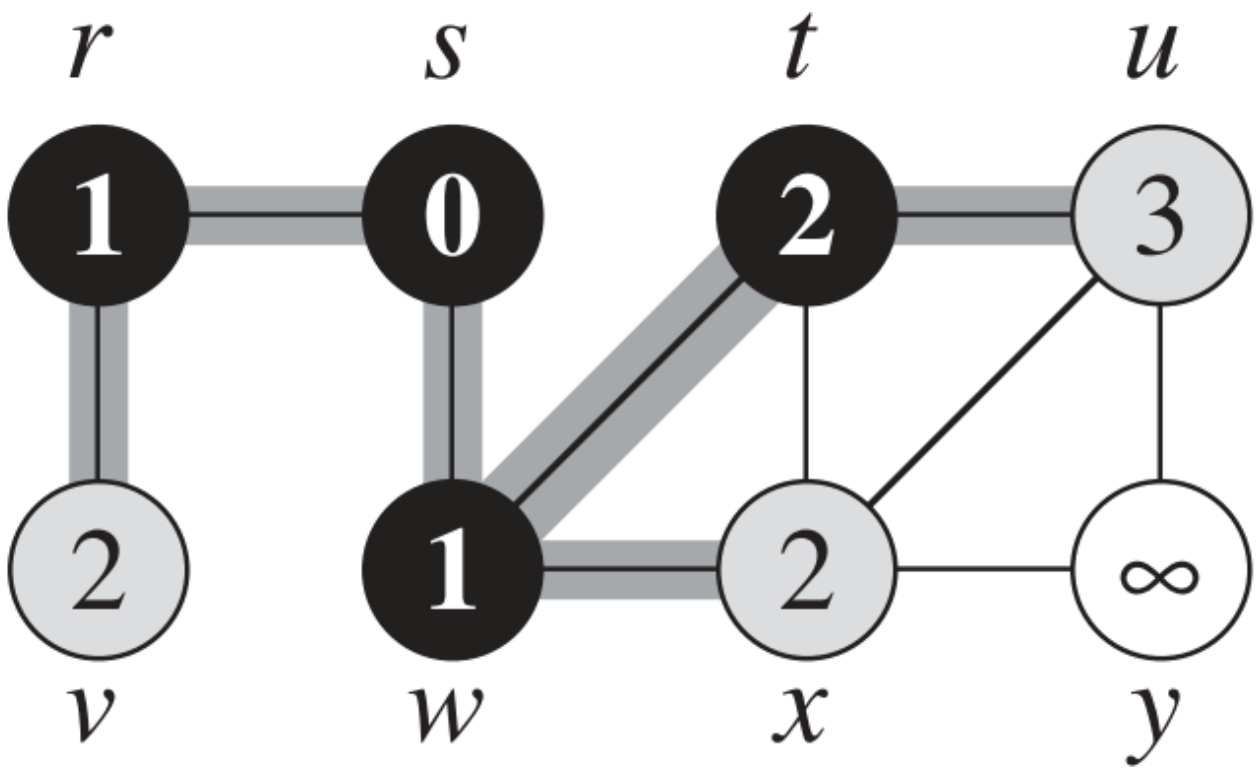

Q

x	v	u
2	2	3

(f)

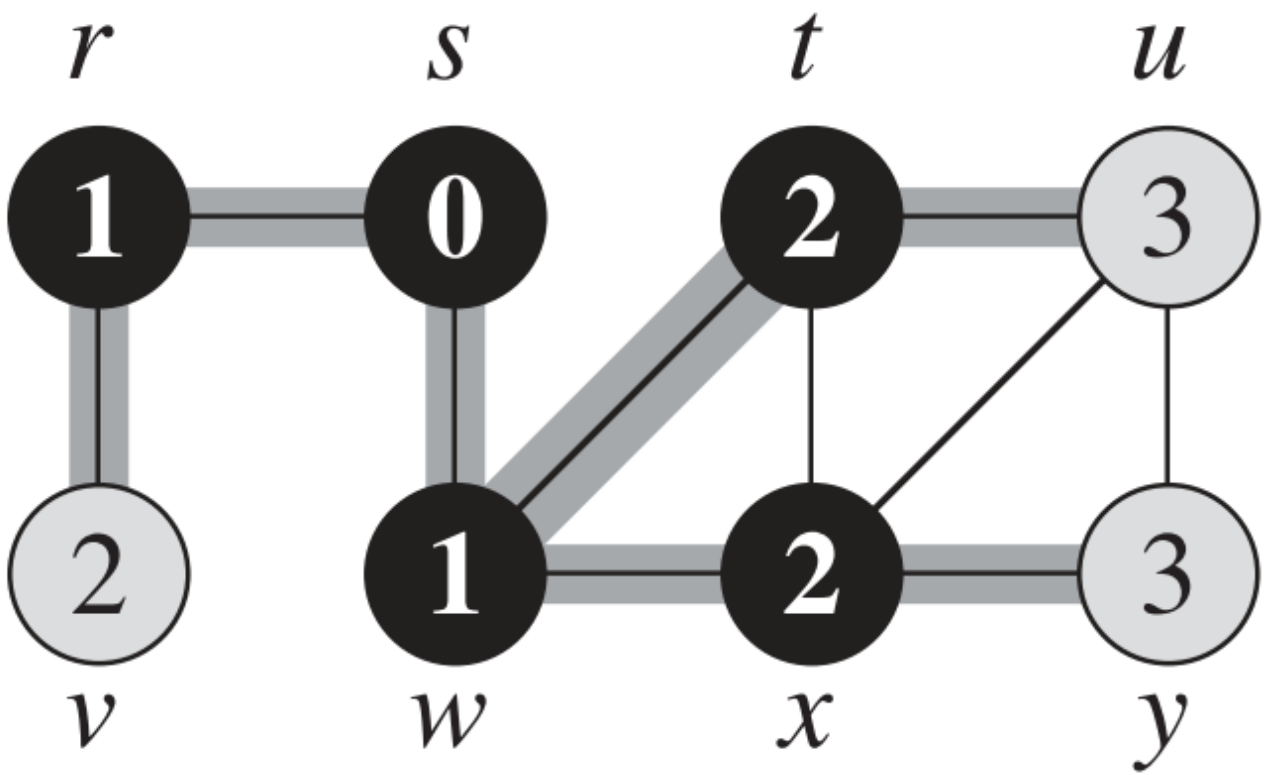

Q

v	u	y
2	3	3

(g)

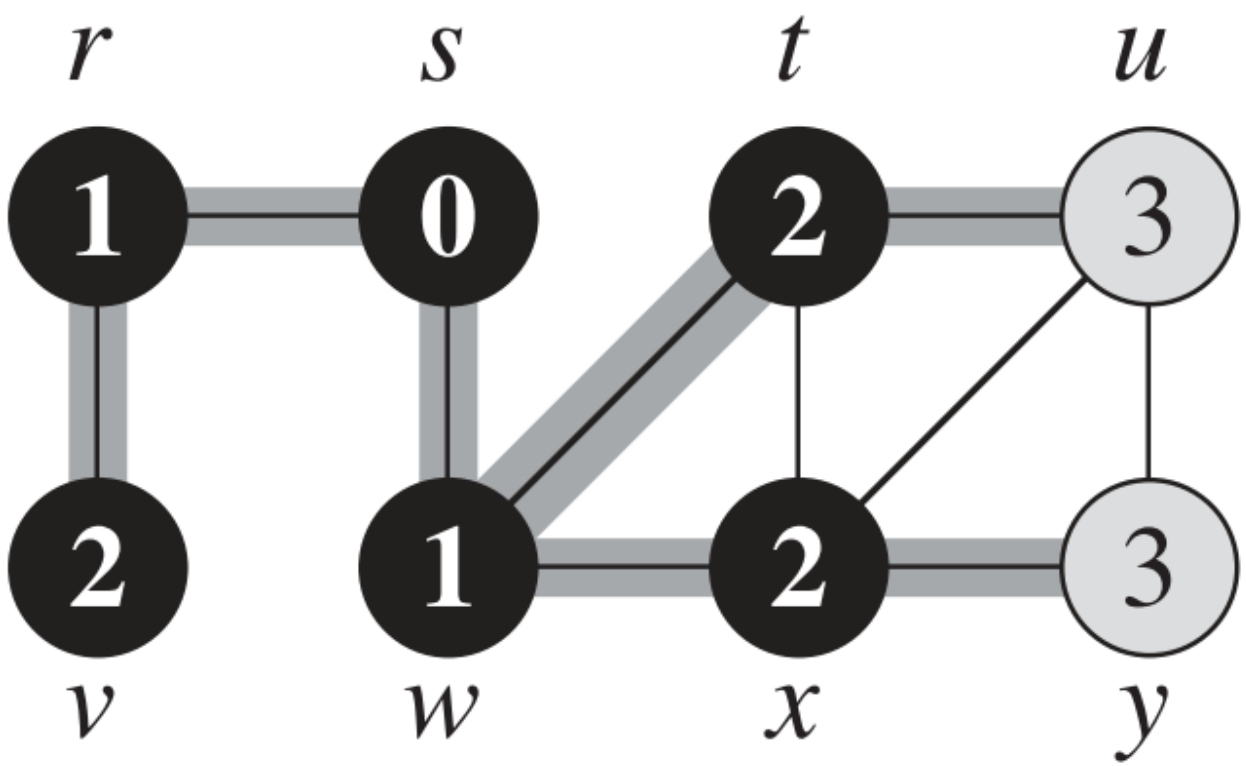

Q

u	y
3	3

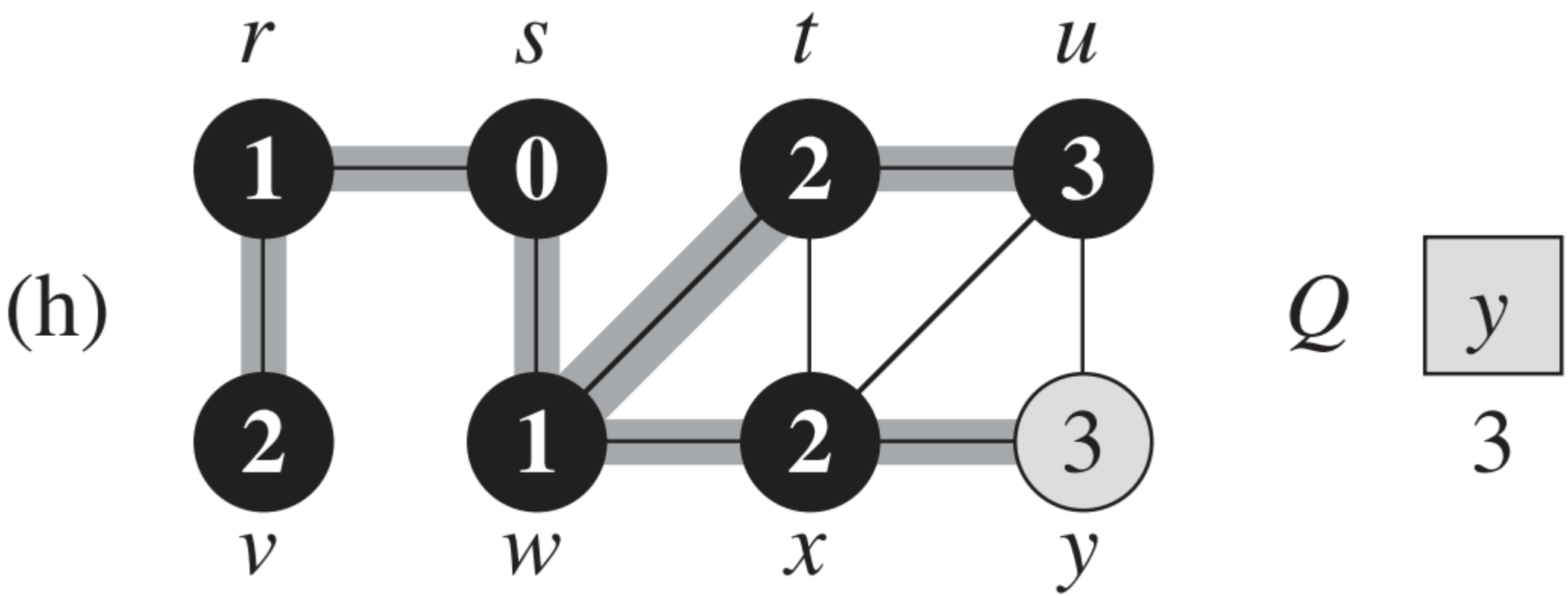
(h)
r
s
t
u
1
0
2
3
2
1
2
3
v
w
x
y
Q
y
3

(i)

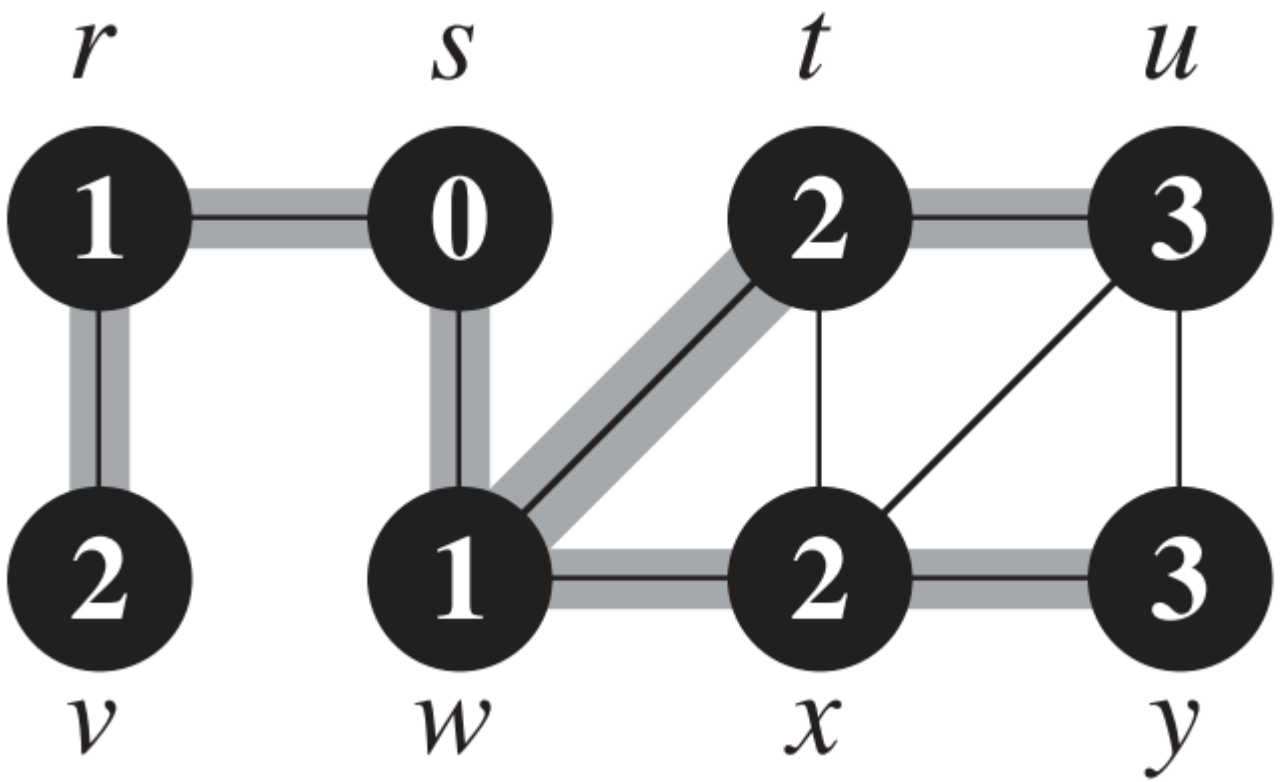

Q $\emptyset$

$\boxed{\text{BFS}(G, s)}$

BFS(G, s)

```
for each vertex u ∈ G.V − {s}
```

```
BFS(G, s)
for each vertex u ∈ G.V − {s}
    u.color = WHITE
    u.d = ∞
    u.π = NIL
```

```
BFS(G, s)
for each vertex u ∈ G.V − {s}
    u.color = WHITE
    u.d = ∞
    u.π = NIL
s.color = GRAY
s.d = 0
s.π = NIL
```

```
BFS(G, s)
for each vertex u ∈ G.V − {s}
    u.color = WHITE
    u.d = ∞
    u.π = NIL
s.color = GRAY
s.d = 0
s.π = NIL
Q = ∅
ENQUEUE(Q, s)
```

```
BFS(G, s)
for each vertex u ∈ G.V − {s}
    u.color = WHITE
    u.d = ∞
    u.π = NIL
s.color = GRAY
s.d = 0
s.π = NIL
Q = ∅
ENQUEUE(Q, s)
while Q ≠ ∅
```

```
BFS(G, s)
for each vertex u ∈ G.V − {s}
    u.color = WHITE
    u.d = ∞
    u.π = NIL
s.color = GRAY
s.d = 0
s.π = NIL
Q = ∅
ENQUEUE(Q, s)
while Q ≠ ∅
    u = DEQUEUE(Q)
```

```
BFS(G, s)
for each vertex u ∈ G.V − {s}
    u.color = WHITE
    u.d = ∞
    u.π = NIL
s.color = GRAY
s.d = 0
s.π = NIL
Q = ∅
ENQUEUE(Q, s)
while Q ≠ ∅
    u = DEQUEUE(Q)
    for each v ∈ G.Adj[u]
```

```
BFS(G, s)
for each vertex u ∈ G.V − {s}
    u.color = WHITE
    u.d = ∞
    u.π = NIL
s.color = GRAY
s.d = 0
s.π = NIL
Q = ∅
ENQUEUE(Q, s)
while Q ≠ ∅
    u = DEQUEUE(Q)
    for each v ∈ G.Adj[u]
        if v.color == WHITE
            v.color = GRAY
            v.d = u.d + 1
            v.π = u
```

```
BFS(G, s)
for each vertex u ∈ G.V − {s}
    u.color = WHITE
    u.d = ∞
    u.π = NIL
s.color = GRAY
s.d = 0
s.π = NIL
Q = ∅
ENQUEUE(Q, s)
while Q ≠ ∅
    u = DEQUEUE(Q)
    for each v ∈ G.Adj[u]
        if v.color == WHITE
            v.color = GRAY
            v.d = u.d + 1
            v.π = u
            ENQUEUE(Q, v)
```

```
BFS(G, s)
for each vertex u ∈ G.V − {s}
    u.color = WHITE
    u.d = ∞
    u.π = NIL
s.color = GRAY
s.d = 0
s.π = NIL
Q = ∅
ENQUEUE(Q, s)
while Q ≠ ∅
    u = DEQUEUE(Q)
    for each v ∈ G.Adj[u]
        if v.color == WHITE
            v.color = GRAY
            v.d = u.d + 1
            v.π = u
            ENQUEUE(Q, v)
    u.color = BLACK
```

- Running time: $O(V + E)$
  - Initialization : $O(V)$
  - For each v, each adjacency list is checked at most once.
  - Hence the cost of the while loop is $O(V + E)$.

- Note: BFS provides shortest path from source to any vertex.

Depth First Search

Depth-first search (DFS)

- Strategy: to search *deeper* in the graph whenever possible.

- DFS *explores edges out of the most recently discovered vertex* v that still has unexplored edges leaving it.

Depth-first search (DFS)

- Strategy: to search *deeper* in the graph whenever possible.

- DFS *explores edges out of the most recently discovered vertex* v that still has unexplored edges leaving it.

- Once all of v's edges have been explored, the search *backtracks* to explore edges leaving the vertex from which v was discovered

Depth-first search (DFS)

- As in BFS, DFS colors vertices during the search to indicate their state.

- Initially *white*, is *grayed* when it is discovered in the search, and is *blackened* when it is finished

Depth-first search (DFS)

- DFS also timestamps each vertex. Each vertex v has two timestamps:

Depth-first search (DFS)

- DFS also *timestamps* each vertex. Each vertex v has two timestamps:
  - First timestamp $\boldsymbol{v.d}$ records when v is first discovered (and grayed)

Depth-first search (DFS)

- DFS also *timestamps* each vertex. Each vertex v has two timestamps:
  - First timestamp $\boldsymbol{v.d}$ records when v is first discovered (and grayed)
  - Second timestamp $\boldsymbol{v.f}$ records when the search finishes examining v's adjacency list (and blackens v).

Depth-first search (DFS)

- DFS also *timestamps* each vertex. Each vertex v has two timestamps:
  - First timestamp $\boldsymbol{v.d}$ records when v is first discovered (and grayed)
  - Second timestamp $\boldsymbol{v.f}$ records when the search finishes examining v's adjacency list (and blackens v).

- These timestamps provide important information about the structure of the graph.

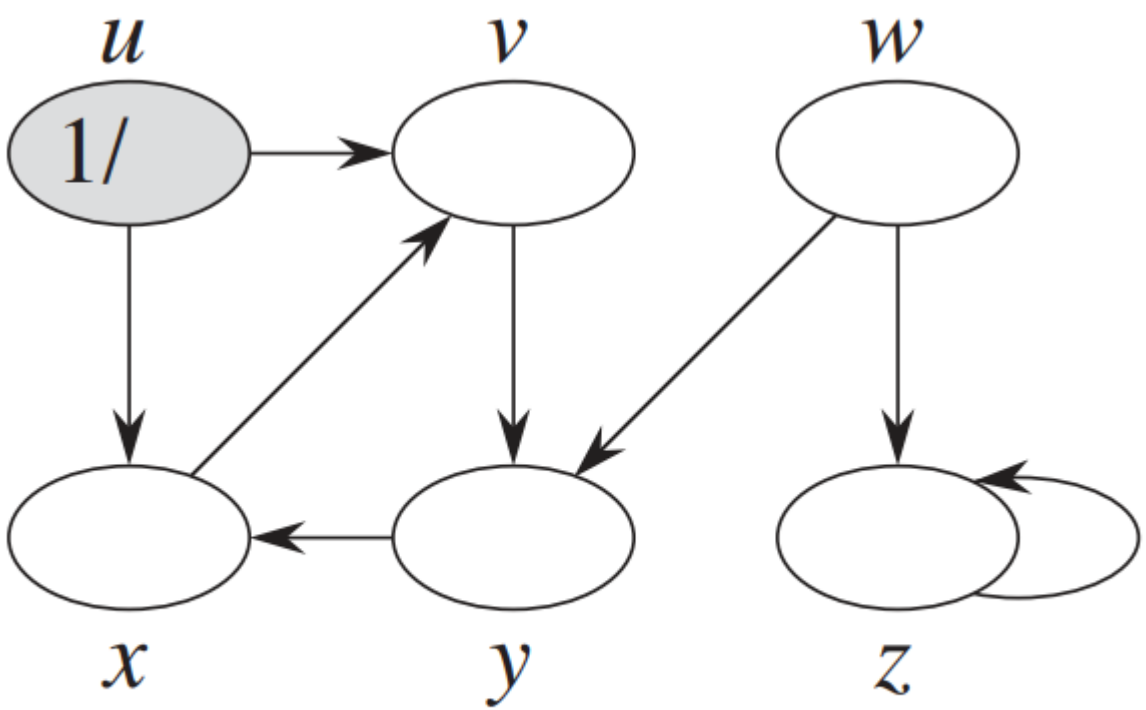

(a)

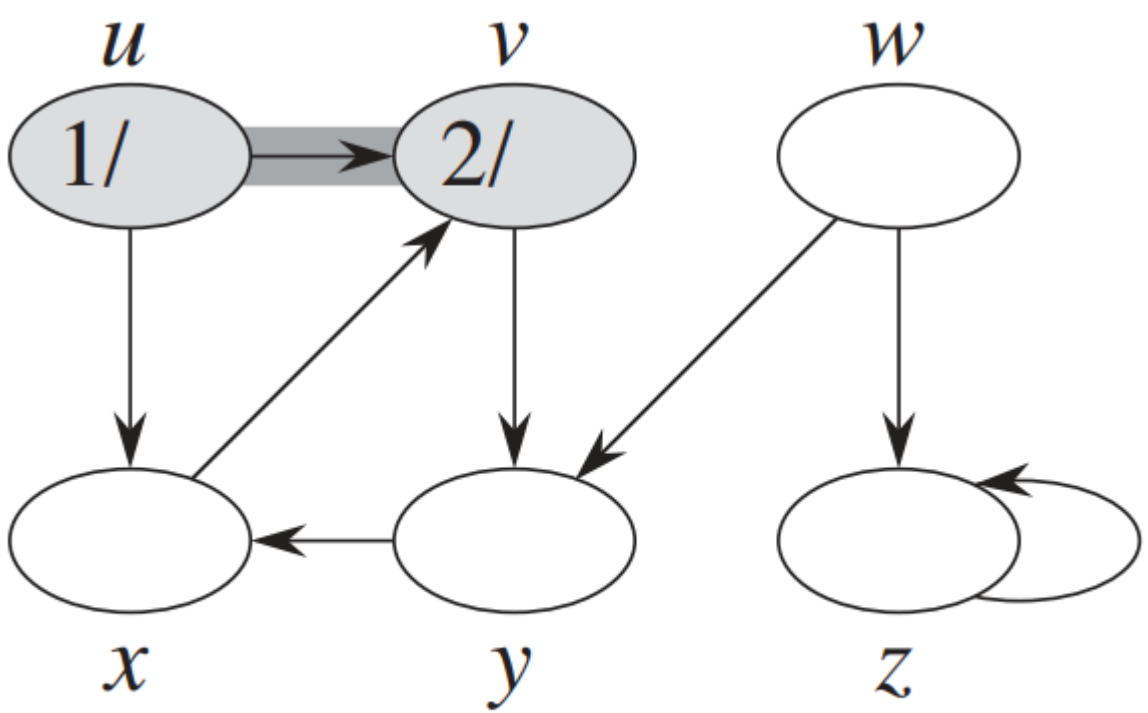

(b)

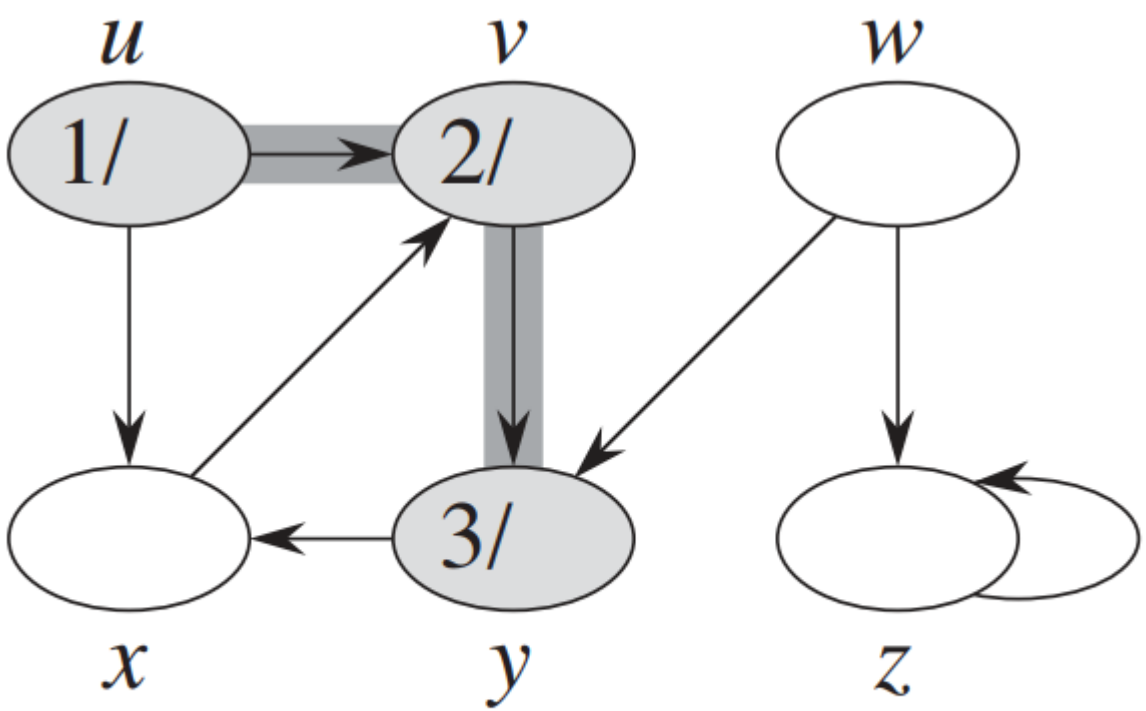

(c)

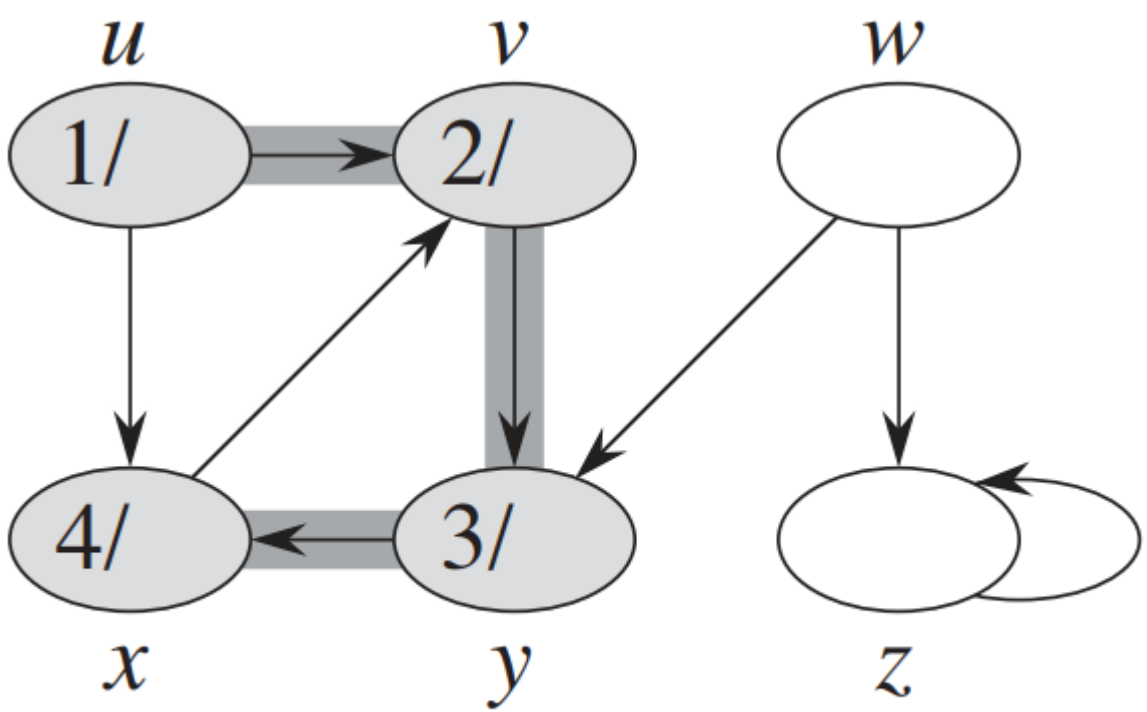

(d)

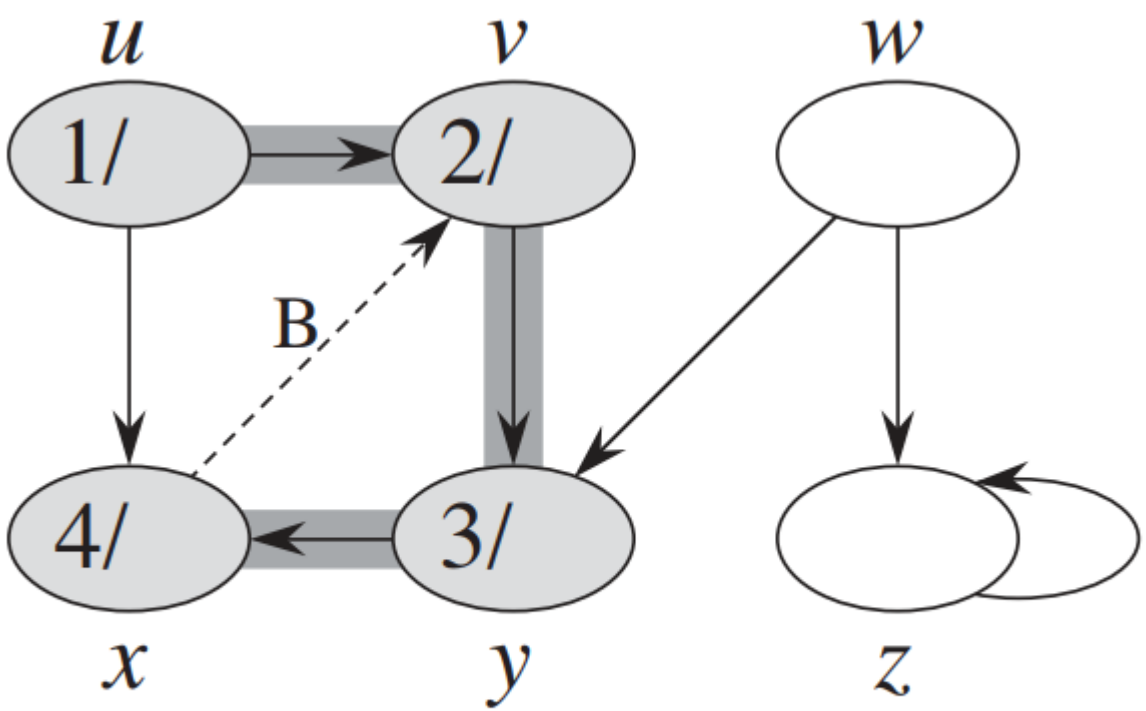

(e)

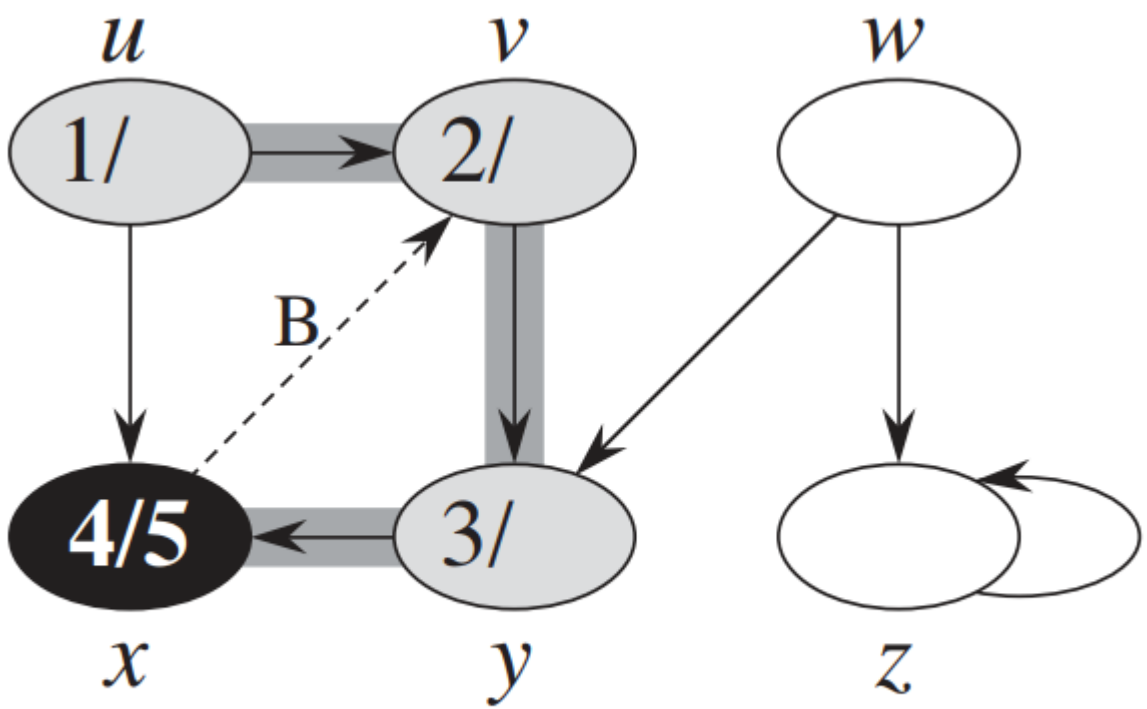

(f)

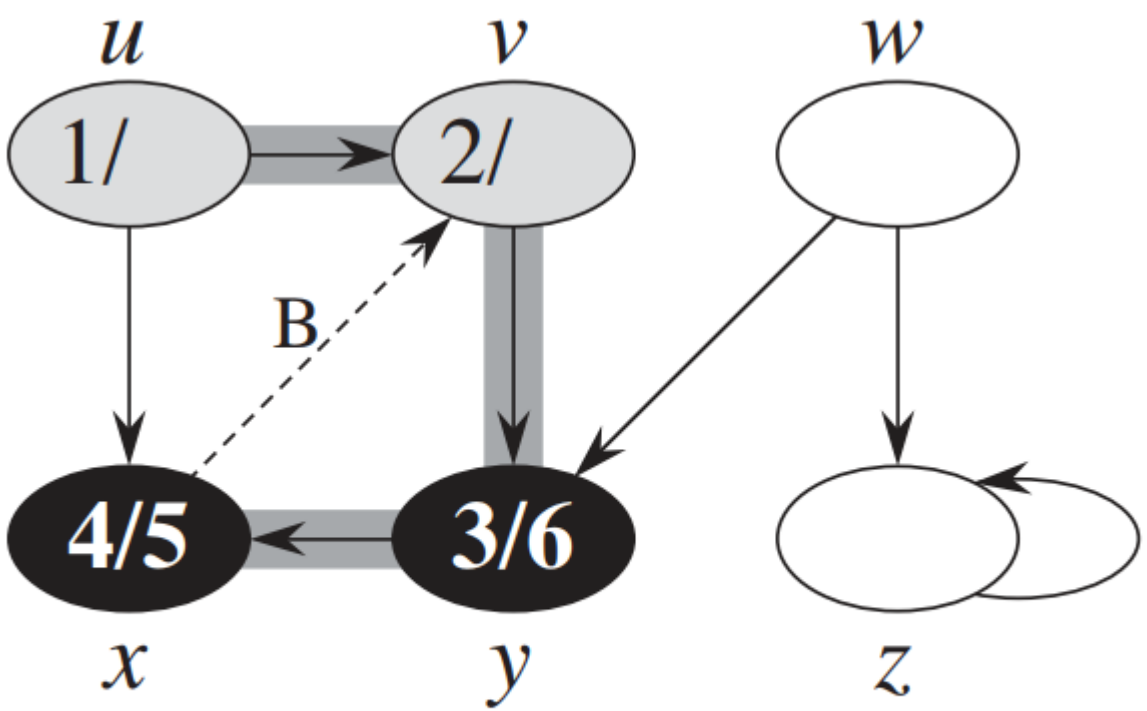

(g)

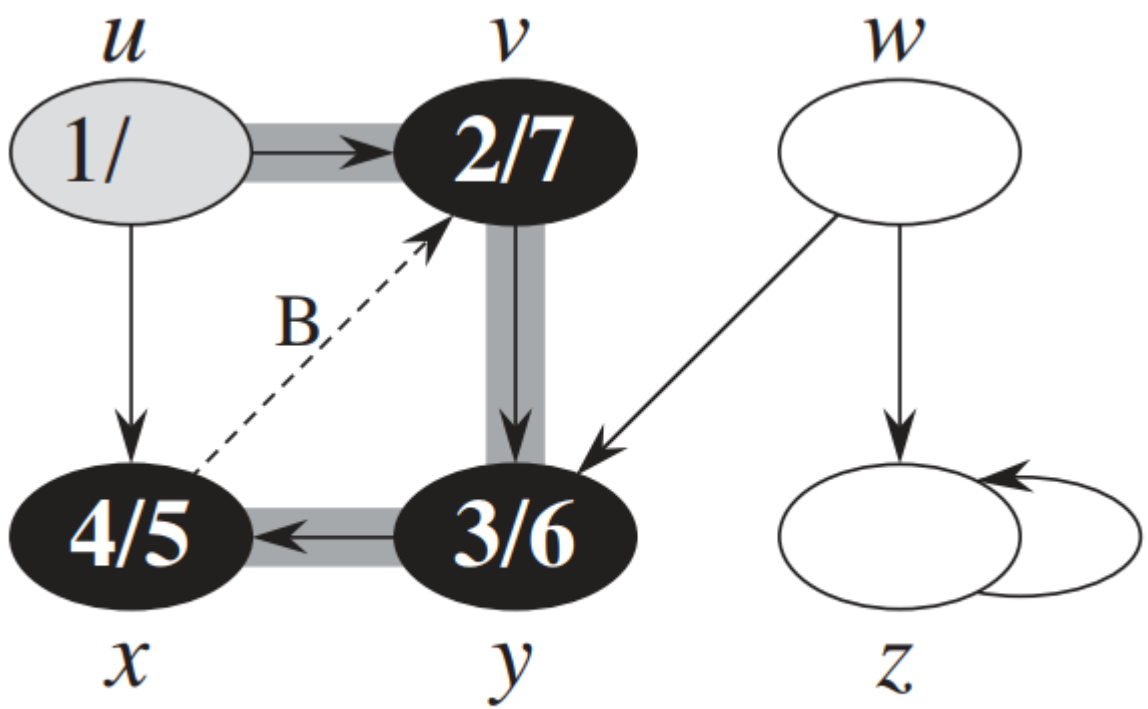

(h)

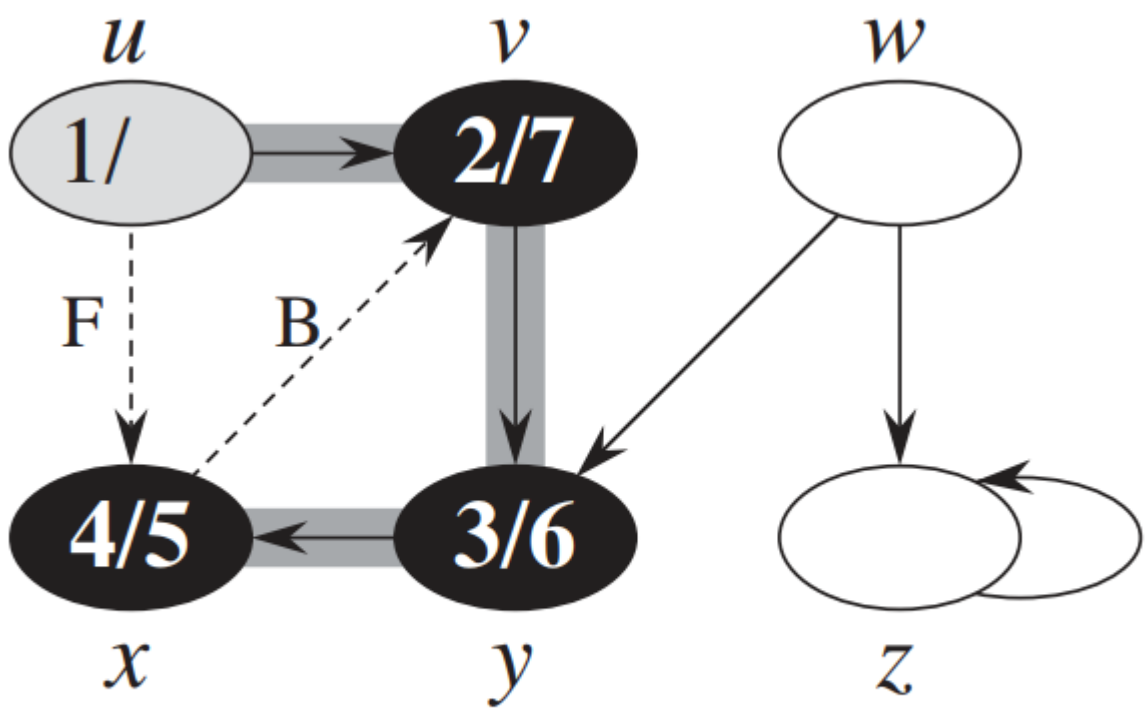

(i)

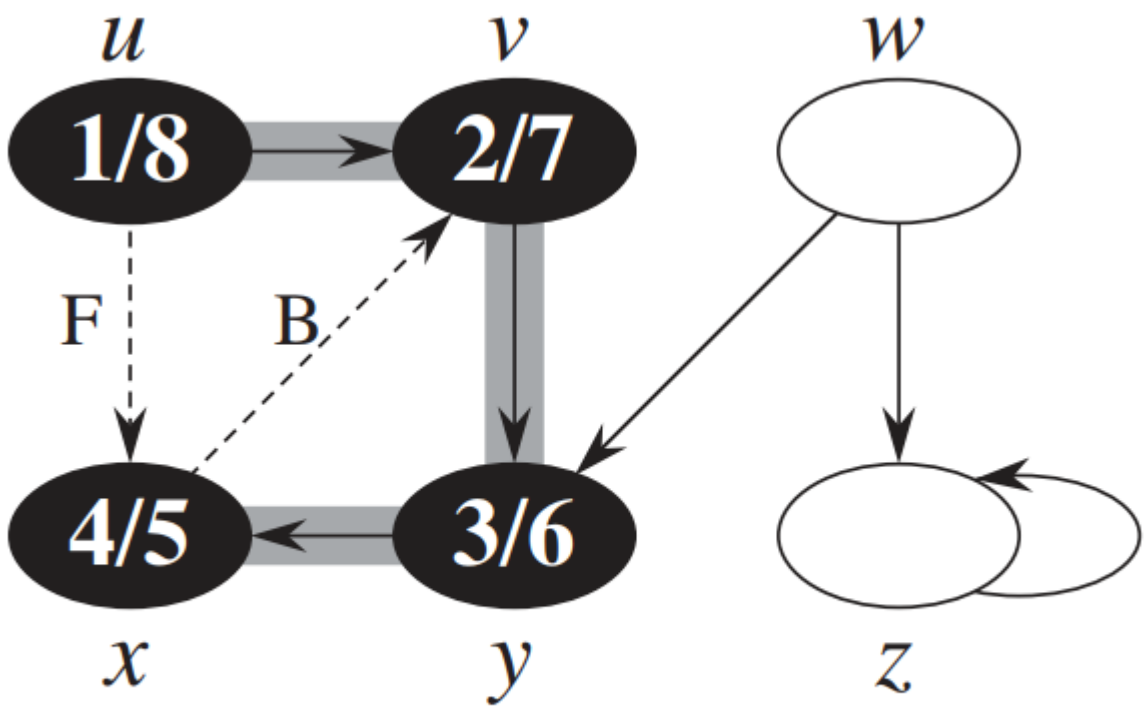

(j)

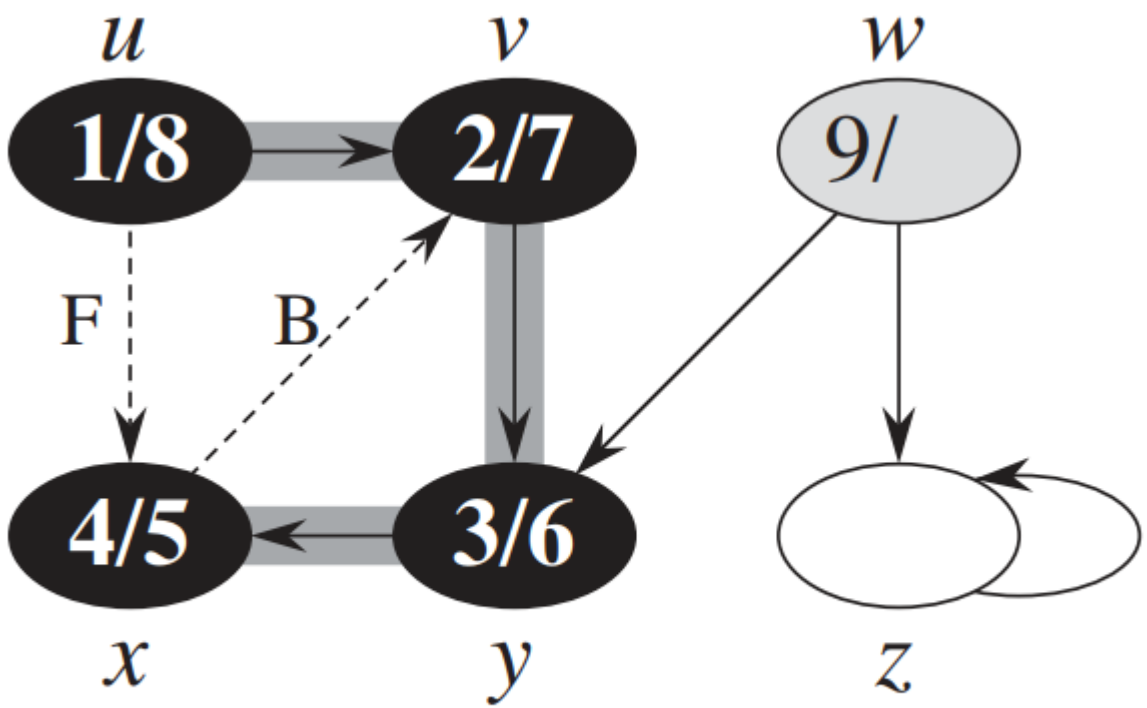

(k)

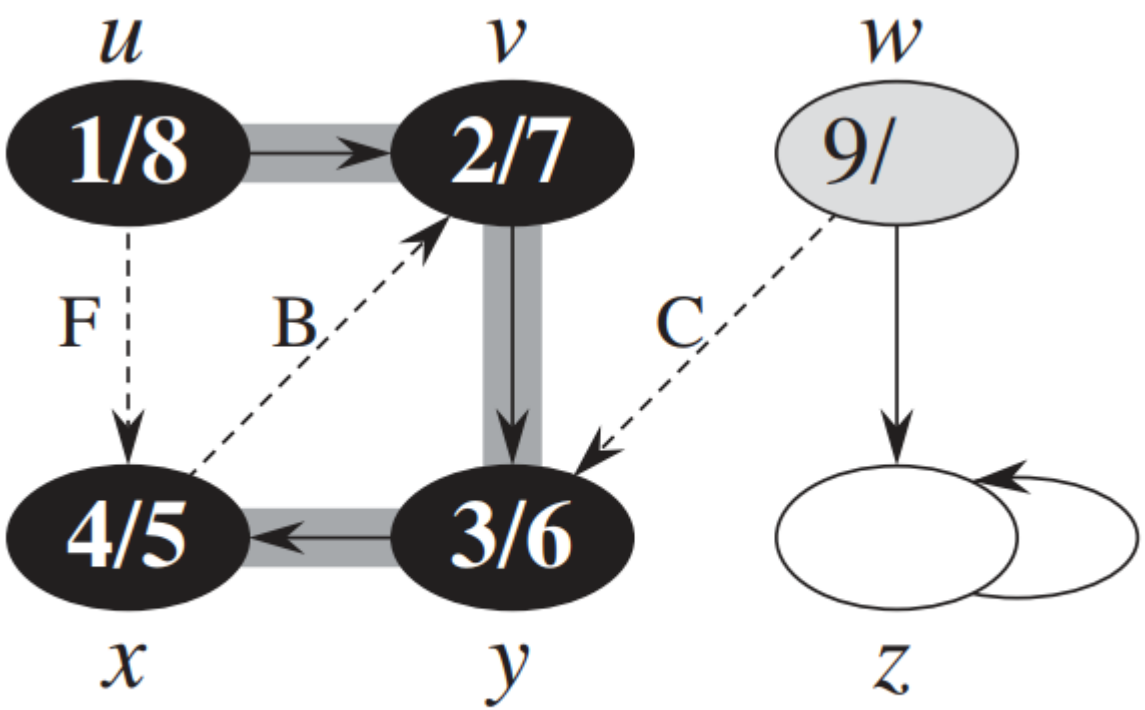

(l)

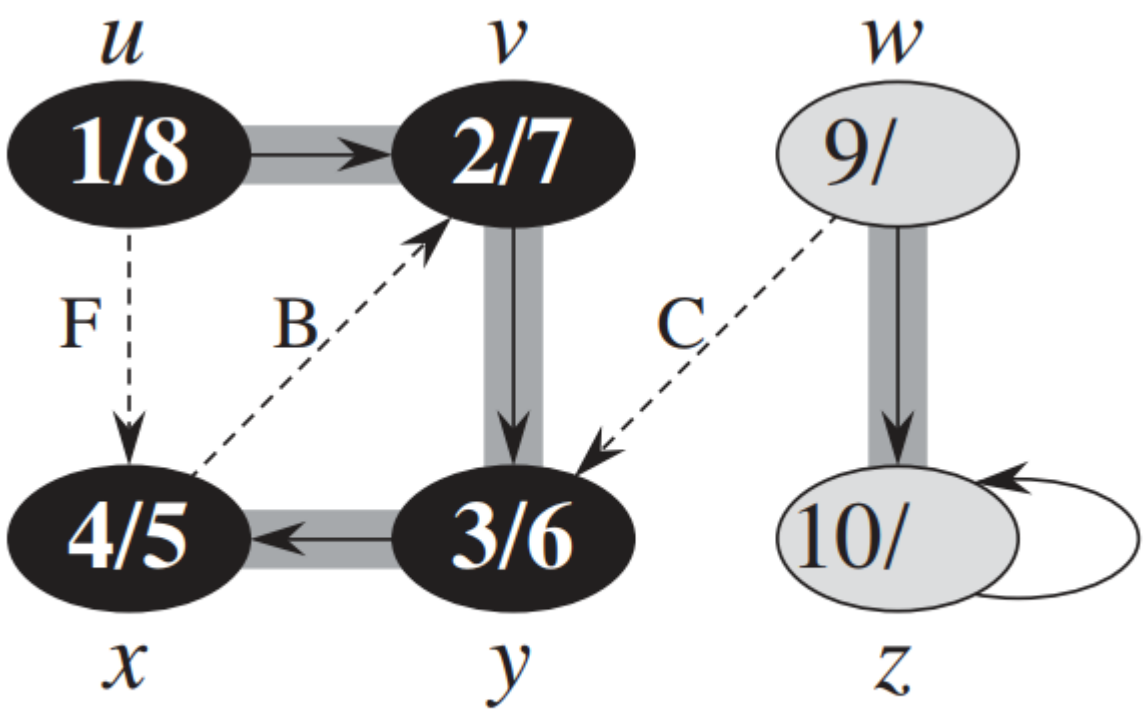

(m)

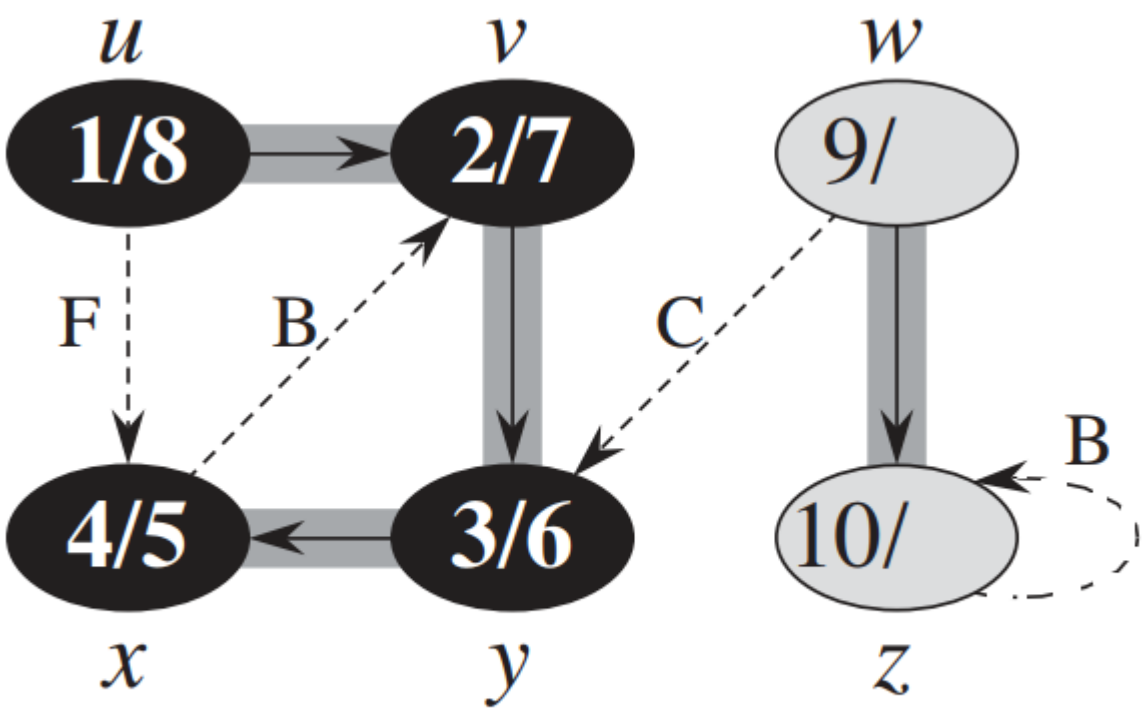

(n)

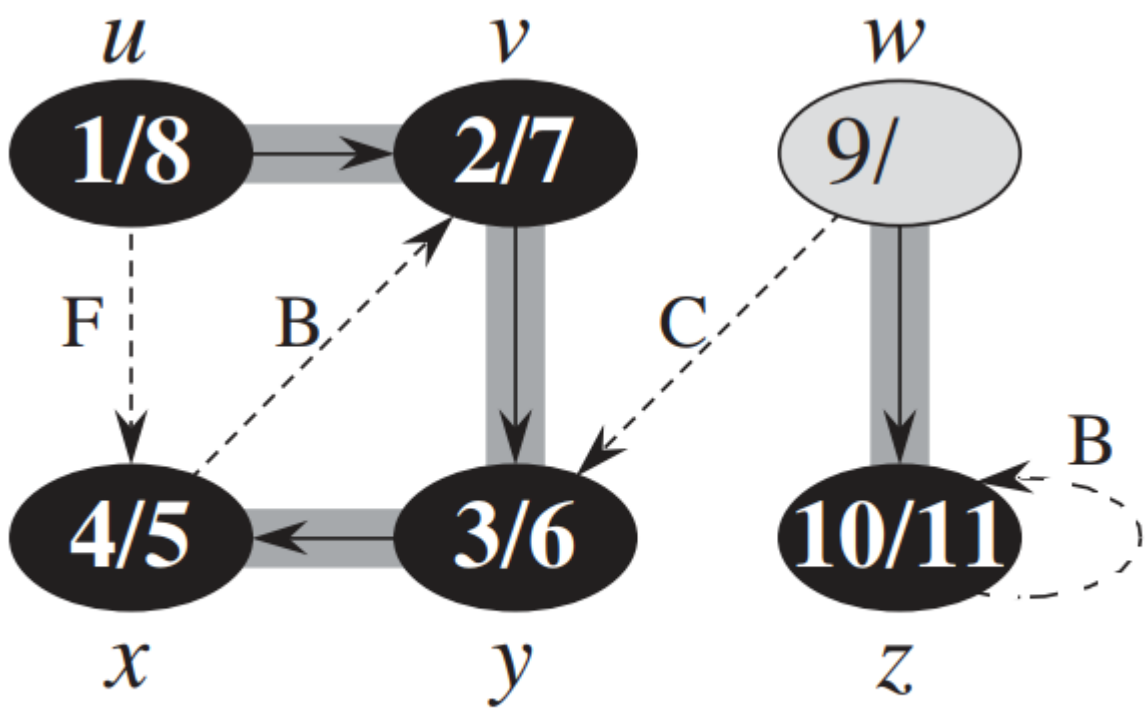

(o)

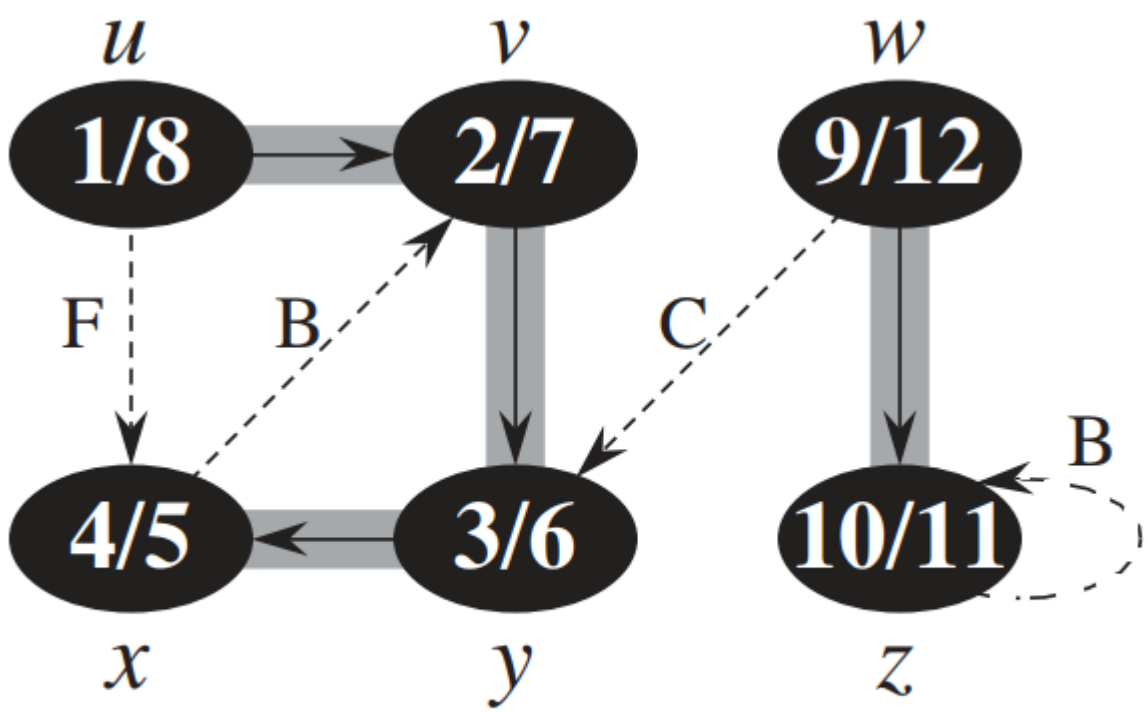

(p)

```
DFS(G)
for each vertex u ∈ G.V
    u.color = WHITE
    u.π = NIL
```

```
DFS(G)
for each vertex u ∈ G.V
    u.color = WHITE
    u.π = NIL
time = 0
for each vertex u ∈ G.V
    if u.color == WHITE
        DFS-VISIT(G, u)
```

```
DFS(G)
for each vertex u ∈ G.V
    u.color = WHITE
    u.π = NIL
time = 0
for each vertex u ∈ G.V
    if u.color == WHITE
        DFS-VISIT(G, u)
```

```
DFS-VISIT(G, u)
time = time + 1                    // white vertex u has just been discovered
u.d = time
u.color = GRAY
```

```
DFS(G)
for each vertex u ∈ G.V
    u.color = WHITE
    u.π = NIL
time = 0
for each vertex u ∈ G.V
    if u.color == WHITE
        DFS-VISIT(G, u)
```

```
DFS-VISIT(G, u)
time = time + 1                    // white vertex u has just been discovered
u.d = time
u.color = GRAY
for each v ∈ G.Adj[u]              // explore edge (u, v)
    if v.color == WHITE
        v.π = u
        DFS-VISIT(G, v)
```

```
DFS(G)
for each vertex u ∈ G.V
    u.color = WHITE
    u.π = NIL
time = 0
for each vertex u ∈ G.V
    if u.color == WHITE
        DFS-VISIT(G, u)
```

```
DFS-VISIT(G, u)
time = time + 1                    // white vertex u has just been discovered
u.d = time
u.color = GRAY
for each v ∈ G.Adj[u]              // explore edge (u, v)
    if v.color == WHITE
        v.π = u
        DFS-VISIT(G, v)
u.color = BLACK                    // blacken u; it is finished
time = time + 1
u.f = time
```

- DFS can be used to classify the edges of the input graph.
- The type of each edge can provide important information about a graph.
- For example, a directed graph is acyclic if and only if DFS has no ‘back’ edges.

- Four edge types in terms of DFS:

  1. Tree edges are edges in the depth-first forest. Edge (u, v) is a tree edge if v was *first discovered* by exploring edge (u, v).

- Four edge types in terms of DFS:

1. Tree edges are edges in the depth-first forest. Edge (u, v) is a tree edge if v was *first discovered* by exploring edge (u, v).

2. Back edges are those edges (u, v) *connecting a vertex* $\boldsymbol{u}$ *to an ancestor* $\boldsymbol{v}$ in a depth-first tree.

   (We consider self-loops, which may occur in directed graphs, to be back edges.)

- Four edge types in terms of DFS:

  3. Forward edges are those non-tree edges (u, v) connecting a vertex u to a *descendant* v in a depth-first tree.

- Four edge types in terms of DFS:

3. Forward edges are those non-tree edges (u, v) connecting a vertex u to a $descendant\ v$ in a depth-first tree.

4. Cross edges are all other edges. They can go between vertices in the same depth-first tree, as long as one vertex is not an ancestor of the other, or they can go between vertices in different depth-first trees.

- The DFS algorithm has enough information to classify some edges as it encounters them.

- The key idea is that when we first explore an edge (u, v), the color of vertex v tells us something about the edge:

  1. WHITE indicates a *tree edge*,
  2. GRAY indicates a *back edge*, and
  3. BLACK indicates a *forward edge* or *cross edge*.

(a)

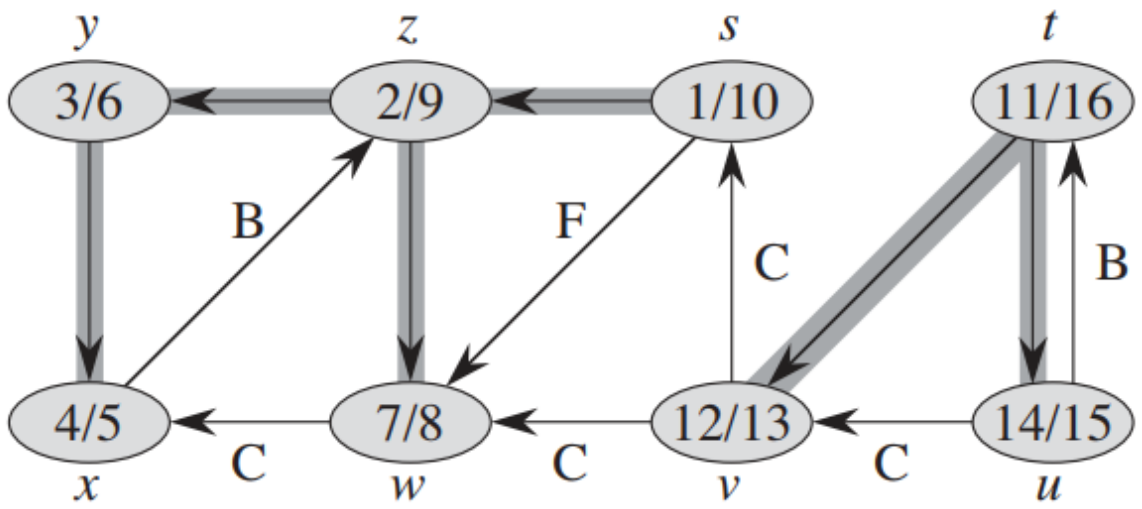
y
z
s
t
3/6
2/9
1/10
11/16
B
F
C
B
4/5
7/8
12/13
14/15
C
C
C
x
w
v
u

(b)

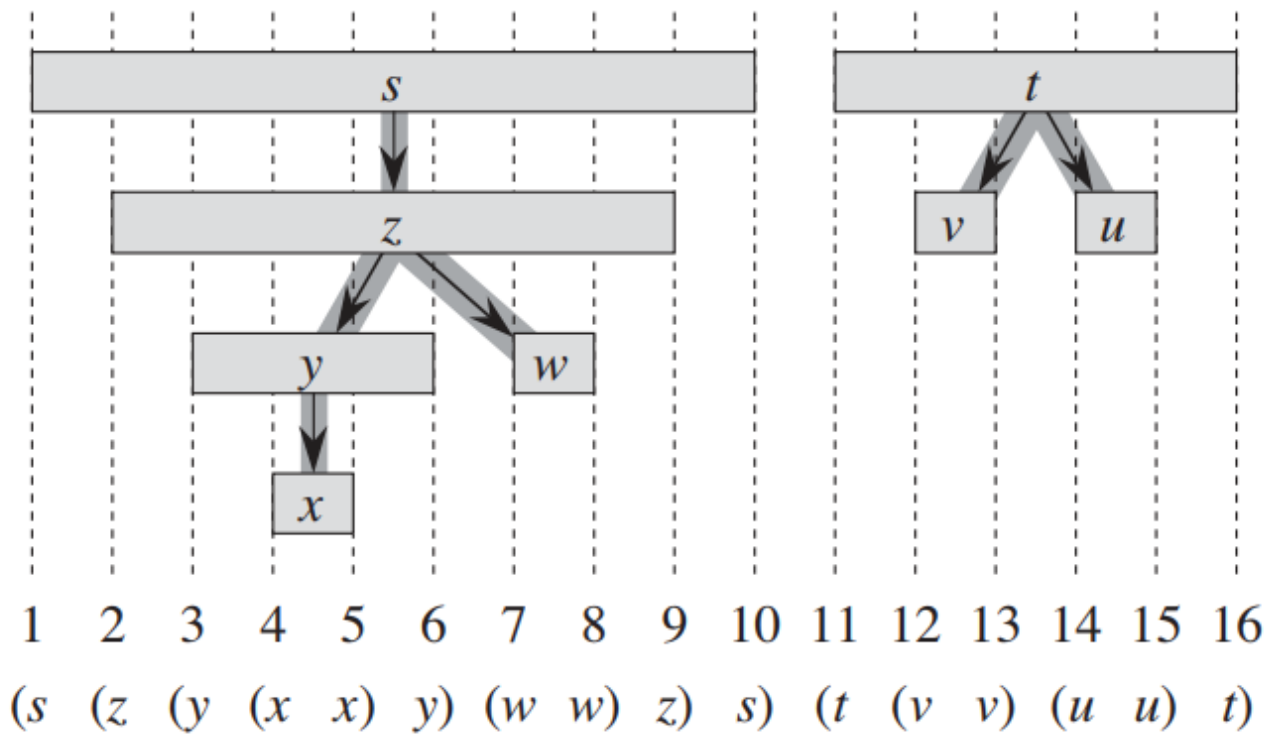
s
t
z
v
u
y
w
x
1 2 3 4 5 6 7 8 9 10 11 12 13 14 15 16
(s (z (y (x x) y) (w w) z) s) (t (v v) (u u) t)

(a)

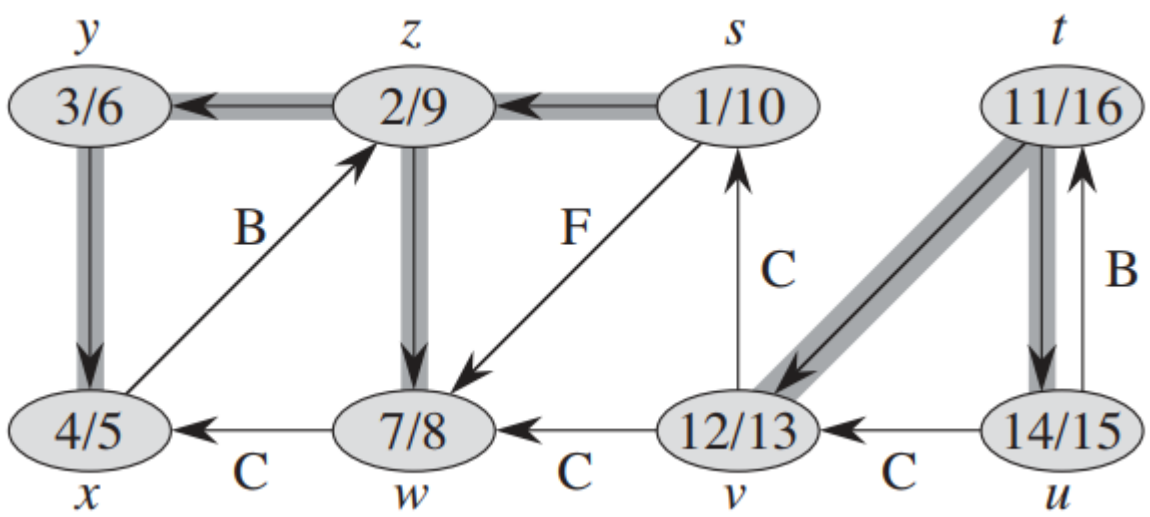
y
z
s
t
3/6
2/9
1/10
11/16
B
F
C
B
4/5
7/8
12/13
14/15
C
C
C
x
w
v
u

(c)

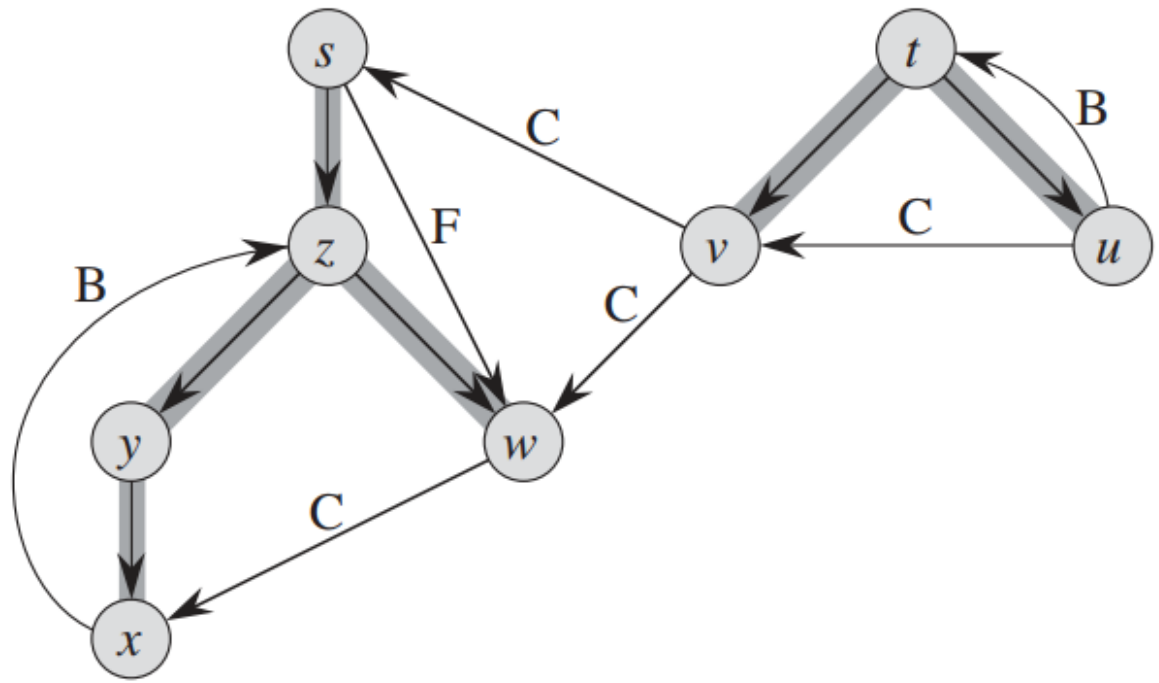
s
t
C
B
F
C
z
v
u
B
C
y
w
C
x

- What is the complexity of DFS algorithm?

Thank you